INSTALLATION AND OPERATION MANUAL
DAT 410 INVERTER

Digital Auto Tuning

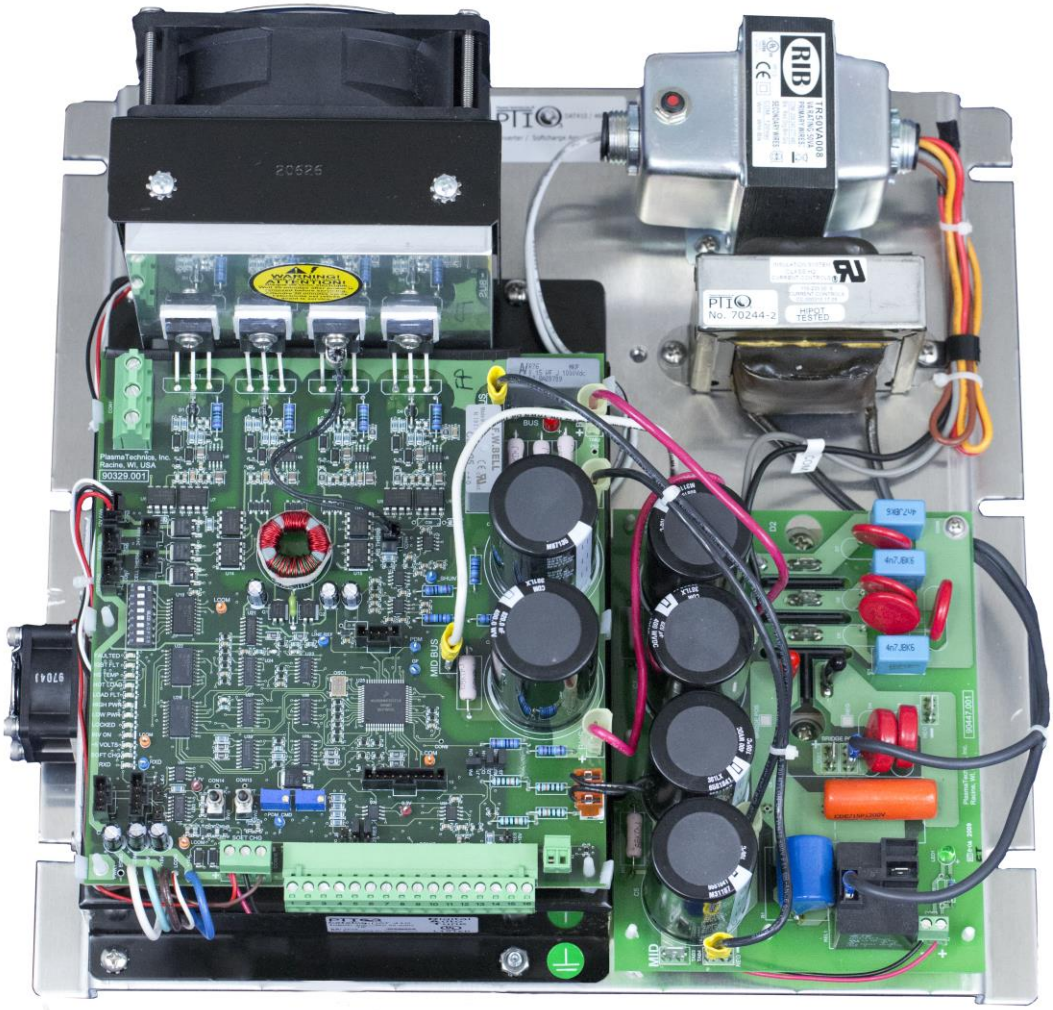

Plasma Technics, Inc.®

1900 William St
Racine, Wisconsin 53404-1875

Office : (262) 637-7180
Fax : (262) 637-7157

Web: www.plasmatechnics.com
E-Mail: sales@plasmatechnics.com

Copyright © 2009 by Plasma Technics®, Incorporated.

All rights reserved. No part of the publication may be copied, reproduced, or reduced to any electronic media or machine-readable format without the prior written permission of Plasma Technics Inc.®

NOTE:

THIS MANUAL COVERS THE DIGITAL AUTO TUNING (DAT410) INVERTER FOR OZONE GENERATOR SERVICE.

The information contained in this manual is considered accurate to the best knowledge of the supplier at the time of publication. The manufacturer, however, assumes no liability for errors that may exist. The supplier reserves the right to change data and specifications without notice.

Document Reference: AppnoteDAT410 v2.1 Apr 28, 2022

PCB I.D. Label: 90329.001
PCM I.D. Label: 90447.000

Table of Contents

1 UNPACKING 5

1.1 Verify delivery. 5
1.2 Inspect for damage. 5
1.3 After the initial inspection. 5

2 MECHANICAL MOUNTING 6

2.1 Mounting Environment 6
2.2 Mounting Considerations 6
2.3 How to Mount the Inverter 6

3 ELECTRICAL INSTALLATION 7

3.1 Wiring Standards and Codes 7
3.2 Inverter Electrical Connection Wire Sizing and Fusing 7
3.3 Case Ground 8
3.4 Safety Grounding 8
3.5 Soft Charge 8
3.6 Surge and Current Protection 8
3.7 Motor Application Precautions 8

4 INVERTER OUTPUT CALCULATIONS & WAVEFORMS 10

4.1 Ratings and Measurements 10
4.2 Output Voltage Calculations 10
4.3 Pulse Density Modulation (PDM) 11
4.4 Output Frequency and Voltage Adjustment 11
4.5 Output Rate of Change Calculations 11

5 LOW POWER CONNECTIONS 12

5.1 16 Pin I/O Connections 15
5.2 Dip Switch & Jumpers 17
5.3 Pots & Buttons 19

6 OPERATING STATUS LEDS 24

7 APPLICATIONS 27

7.1 System Component Wiring 27
7.2 Plate Assembly Wiring View (figure) 28
7.3 Retrofit Series transformer types that can be used with the DAT410 29

8 START - UP 29

8.1 Safety Considerations 29
8.2 Start-up Checklist 30
8.3 Start-Up Procedure Power Adjustment 30
8.4 NEW PDM Mixed Mode (M-M) 34
8.5 NEW Inductor Side 35
8.6 NEW PWM Cycle Mode 35
8.7 NEW Frequency Tune Offset 35
8.8 NEW PDM Integration Time 35

8.9 NEW MULTI-UNIT MASTER / SLAVE WIRING AND PROGRAMMING 36
9 TROUBLESHOOTING 39
10 NOTES & GENERAL INFORMATION 41
11 WARRANTY 42

1 Unpacking

1.1 Verify delivery.

Check that you received the inverter and optional equipment that was ordered.
Verify that the part numbers match your purchase order and that the correct options have been installed.
Report any discrepancies to your supplier.

1.2 Inspect for damage.

Inspect the inverter for damage that may have occurred during shipment. Visually examine the contents for obvious problems.
If damage is found, do not operate the inverter. Report the problem immediately to your supplier.

1.3 After the initial inspection.

Your inverter can be repacked and stored for future use. Choose a storage location that is clean and dry.
Do not store in ambient temperatures below 5° F or above 158° F (-15°C to 70° C)
Do not store in wet areas or areas of high condensation.
Do not store in corrosive environments.

2 Mechanical Mounting

Proper mechanical installation of the DAT410 is necessary to ensure both reliable and efficient operation and ease of maintenance.

2.1 Mounting Environment

The inverter should be mounted in an environment that is **free** from the following:

!*Corrosive or volatile vapors. Dust and particles, Excessive moisture.*

!*Shock, Excessive vibration, Temperature extremes***!**

The following environmental specifications apply:

Surrounding air ambient operating temperature: 0° to 40° C (32° to 104° F)

Relative humidity: 5 to 90%, non-condensing.

Altitude (maximum): 1,000 M (3,310 ft), de-rating for altitude is 1% for every 100 M (300 ft) above 1000m.

2.2 Mounting Considerations

The following should be considered when planning the physical installation of your DAT410.

Leave enough clearance for access to all electrical connections.

Allow room for troubleshooting.

Allow at least 80 mm (3 inches) of clearance above and below the unit to permit adequate cooling airflow.

The DAT410 **must be fan cooled** in order for the inverter to be run at full output power. Consult the factory for heat sink only de-ratings or fan placement. It is recommended that applications requiring input currents above 2 amps/leg RMS be fan cooled. In the final installation the convection cooled DAT410 should be mounted with the cooling fins vertical so as to maximize the effects of normal convection cooling. The cooling fan can be mounted in any orientation. Allow a minimum clearance of 25 mm (1.0 in.) between units when mounted side by side. Separate conduit is required for line voltage and control wiring.

2.3 How to Mount the Inverter

Figure 2.1 shows the mechanical layout of the DAT410 inverter. Refer to this drawing when planning your layout. The DAT410 is an open type of equipment and should be mounted to a secure sub-panel or frame.

CAUTION:

Make sure the mounting rack is secure before mounting the inverter. Equipment damage could result from an improperly mounted rack or inverter.

Figure 2.4

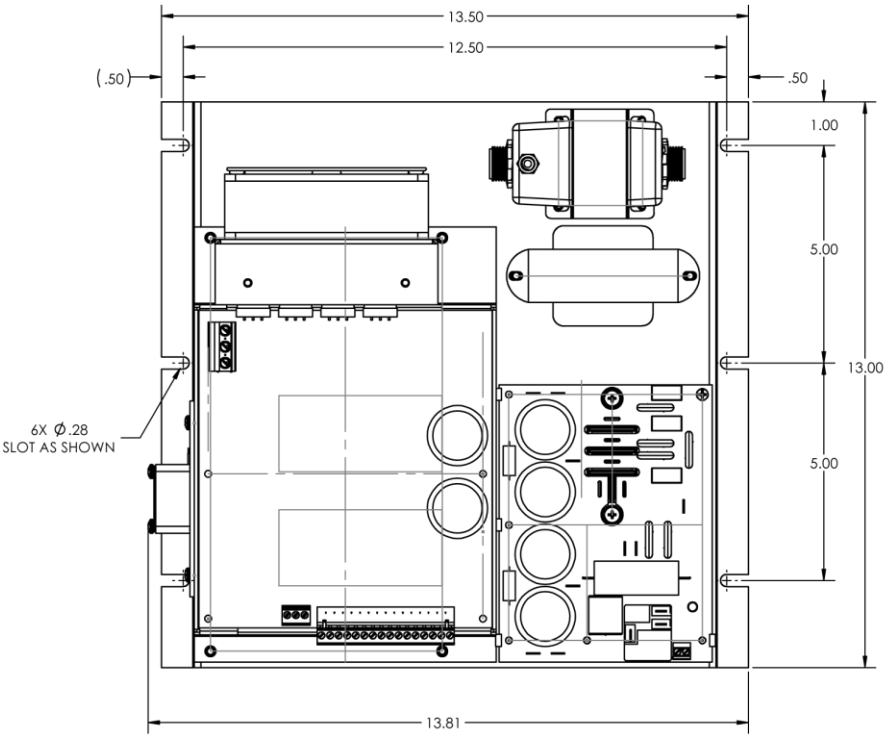

DAT410 Mounting Dimensions, inches : **MAX height 6.5" (heat sink)**

3 Electrical Installation

3.1 Wiring Standards and Codes

The installation person is responsible for following the wiring plan produced by the design engineer for the specific application.

All wiring must conform to the following standards:
National Electrical Code, Publication NFPA No. 70
All local and national codes which apply
For motor usage; use appropriate NEMA relay for protection

The supplier cannot assume responsibility for the compliance or noncompliance to any code governing the proper installation of this equipment.

3.2 Inverter Electrical Connection Wire Sizing and Fusing

The DAT410 3 phase input current rating is 12 amps/leg RMS, 525vac. Output current rating is 15amps RMS. Refer to the National Electrical Code [NEC], Publication NFPA No. 70, Article 310, and any local codes that may apply for wire sizing and selection. Use 60/75°c wire min. and 25 amp input fuses of class K5 or RK5.

Terminal connection max torque 0.6 newton meters (Nm) [5.3 inch lbs].

3.3 Case Ground

Each of the inverters must be connected to ground at their case ground terminal. A grounding electrode conductor or bonding jumper must be connected from the ground terminal to either a grounding electrode buried in the earth or a suitable plant ground with solid connections to earth ground. Refer to NFPA No. 70, Article 250, for details on grounding and grounding electrodes.

3.4 Safety Grounding

The case ground connections should be made at the ground terminals. The case ground of the various system components should be connected to the star grounding bus of the cabinet. A grounding electrode conductor or bonding jumper must be connected from the star grounding bus to either a grounding electrode buried in the earth or a suitable plant ground with solid connections to earth ground. Refer to NFPA No. 70, Article 250, for details on grounding and grounding electrodes.

3.5 Soft Charge

The DAT410 and combined PCM provide completely managed soft charge. High input single cycle surge currents are limited to about 10a by using one 47 ohm on board resistor. The soft charge procedure increases the bus capacitor life. The DAT410 is unique in that the soft charge event is completely processor managed and also includes instant response to transients and brown-out situations which release the unit from damaging surges and re-engage the DAT when stable power is restored. Adjustment to other standards like 380v / 50hz is automatic. Failure or disconnection of the soft charge relay coil is immediately recognized and induces a standby action. The processor automatically defers a run command until the soft charge is measured as complete, I.E: not a timed event.

3.6 Surge and Current Protection

While the DAT410 has an on board surge suppressor (MOV), the customer can add surge protection to protect the inverter devices from line spikes. See Figure 7.1 for connection diagram. Contact your surge suppression supplier for sizing details. The DAT410 utilizes an on board current limiting circuit. The circuit performs current limiting when a potentially destructive current value is detected. If this event occurs the DAT410's output section will automatically shut off. The PCM includes protection components able to suppress energy transient created by the DAT410, ONLY.

3.7 Motor Application Precautions

The DAT410 does not provide Solid State Motor Overload, over-current, over-speed Protection. Installer (end-user) must provide Motor Overload, over-current, and over-speed Protection in accordance with the NEC.

Figure 3.1

Inverter Electronic Layout Description

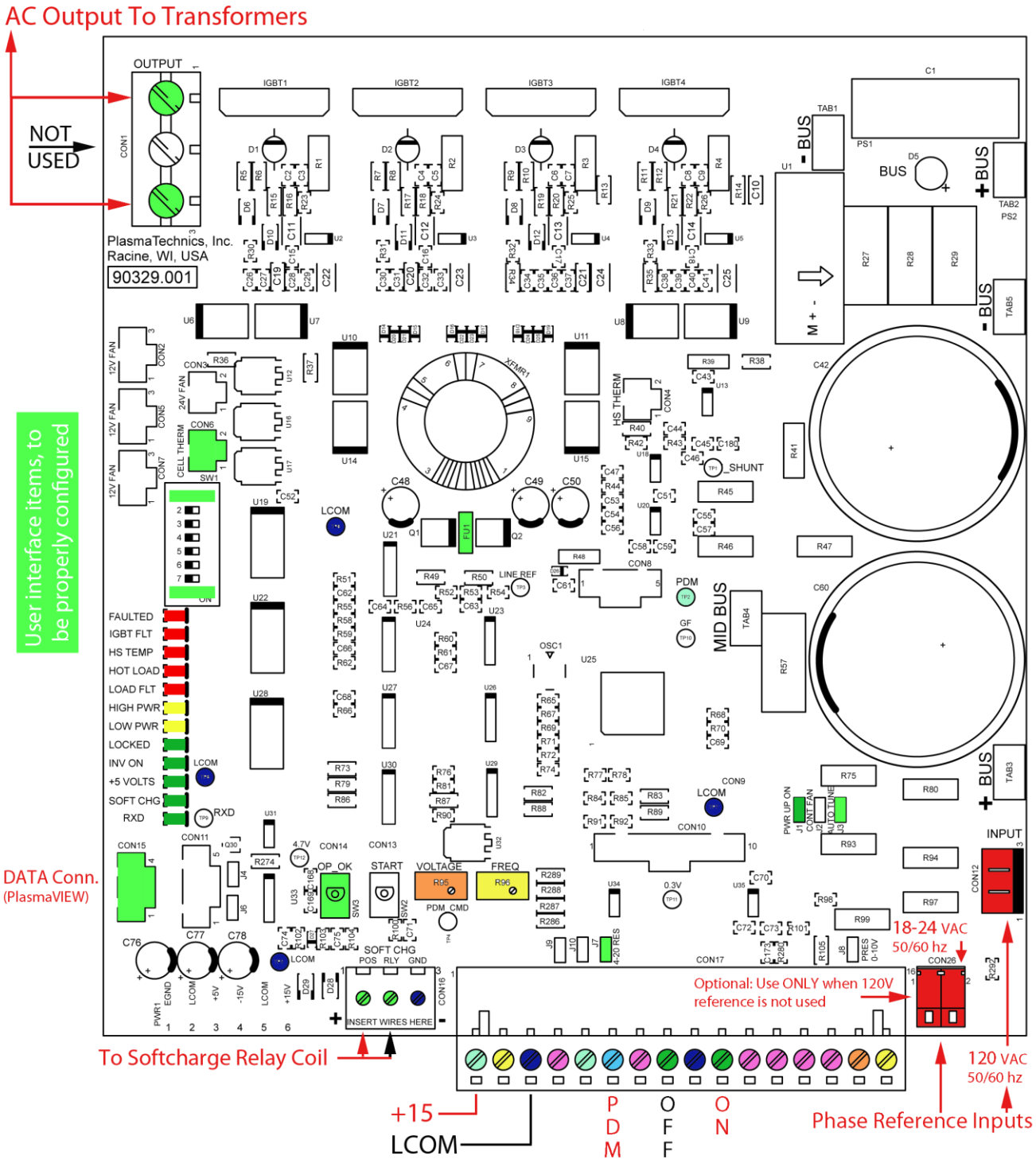

4 Inverter Output Calculations & Waveforms

4.1 Ratings and Measurements

It is very important to measure, evaluate and understand the electrical performance of the system. Calculations below presume PCM and 3 phase mains.

Wattage can be either measured or estimated using the generally accepted premise for DC supply devices. In this example the 3 - phase power line input to the Inverter is supplying 5 amps/leg:

Watts ≈ (Volts * current) * .9 (estimated power factor)

Equivalent single phase current: 5 amp/leg * 1.732 = 8.66a

∴ (480v * 8.66a) * .9 = 3741 Watts

The general rule for any type of transformer that determines the maximum primary amps ***regardless*** of applied primary volts is: **Nameplate VA / Configured Volts (not applied volts)**

Example: 5000va / 480v = 10.42a max or 3000va / 480v = 6.25a max.

Note that maximum primary amps is not related to applied volts. If the applied primary voltage is 50% of the rated value then the VA rating of the transformer has effectively been cut in half.

To continue with this example, if the expected ozone performance is being achieved with 50% of rated primary voltage then it is likely that the output voltage rating of the transformer is twice as high as it should be. Under these conditions the inverter input current could be well within its rating but the transformer could be at twice its rated primary current. This is why it is essential to also measure the transformer primary current. If a voltmeter is available rather than an amp meter then the primary current can be reasonably estimated by taking the inverter input watts and dividing it by the measured primary volts. For the purpose of this example 480vac is measured. Using the above numbers: 3741w / 640v = 5.85 adc.

You can see this 5.85a is nearly the rating of the transformer, which in this configuration is 12.5a.

Note: If the frequency control is going to be substantially increased it is recommended that the pulse width (voltage) control be reduced first.

4.2 Output Voltage Calculations

The RMS output line-to-line voltage (VLL) and its maximum value are partially determined by the input voltage. The Approximate maximum output voltage is calculated by using:

Equation 4.2

Vo (RMS) Max = 1.1547*Vi (VRMS) or

Vo (RMS) Max = 1.1547*Vi (VDC)/ √(2)

The output voltage (VLL) is determined by the pulse width (Tp), at a selected Frequency (f). The pulse width (Tp) is set by a voltage from the voltage adjust to the micro-controller.

4.3 Pulse Density Modulation (PDM)

As shown in Figure 4.1, the high frequency is turned ON and OFF at a low frequency rate. Varying the percent ON time vs OFF time gives a very linear control of output power. The technique allows a high turndown ratio of at least 100:1 (1% to 100% output).

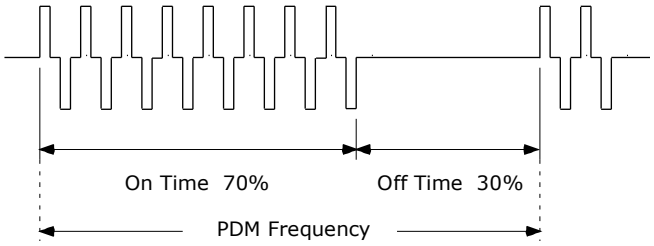

Figure 4.1

The normal method is with an external potentiometer or PLC. The voltage on terminal 6 controls the PDM ozone output. If J3 is OUT, the input is 0 – 10 VDC. If J3 is IN, the input is 4 – 20 ma or 0 – 20 ma. with ozone production starting at about 4.1 ma.

4.4 Output Frequency and Voltage Adjustment

The external voltage applied to the micro-controller can control the output frequency if PlasmaVIEW soft jumper is selected to external and a voltage source is applied to terminal 15.

With PlasmaVIEW soft jumper selected to INT position, the voltage is controlled with the PC board potentiometer. (DEF)

Normally there is no need for these adjustments as they are controlled by the firmware automatically. Automatic frequency adjustment is necessary to automatically compensate for minor gas flow and pressure variances.

4.5 Output Rate of Change Calculations

The output frequency, if controlled by the frequency potentiometer ramps down from a high frequency to the established expected frequency for control. Normally there is no need for this adjustment as it is controlled by the firmware automatically.

5 Low Power Connections

Input / Output Connections (Con17), Principal User Interface

Basic control connection for PDM, ON/OFF, Frequency, Voltage, Enable out, +15vdc, +5vdc are the same as all other Plasma Block® products that have utilized the DAT210/410/510 control board. Note below that many new outputs are available and the enunciation outputs have been changed from 0-5v logic level types to open collector for easier interface to a wider variety of PLC's. The open collector outputs are all **active low** [Active low means that the terminal output is at 0V (Pin 3) when the alarm or other condition is present]. Voltage polarity at the enunciation terminal must be positive and limited to 100 max., less than 50ma. preferred.

TERMINAL

1. +15, aux use limit = 1 Amp maximum.

2. **Frequency Adjust** (optional) external control is selected by PlasmaVIEW soft jumper found in PlasmaVIEW Status Tab. Use 5k Ω pot, 0-10vdc only (10v= 100%). 10 volts can be derived with a 1.5k resistor in series with the pot to +15 (Pin 1).
   Also can be used for **ORP or Dew Point** and graphed in PlasmaVIEW. Use PlasmaVIEW Status Tab to select input type, voltage range and device. Doesn't affect the use of on board Freq. Pot.

3. **Signal Common**, tied to #9 internally.

4. **Flooded Cell** detected enunciation follows LED. 10k Ω pull-up to +5. 100Ω in series with the transistor for current limit. 100ma Max, design with 50ma limit.

5. +5vdc, aux use limit = 3 Amps **The 5V can be used to drive a 5 V coil relay for input current pre-charge and for PLC use for low voltage power supply status. There is a 1 – 2 second delay before +5 V after application of mains voltage.**

6. **PDM input** (optional), use 5kΩ pot, 0-10vdc (10v= 100%). 10 volts can be derived with a 1.5k resistor in series with the 5k pot to +15 (Pin 1). 0 – 10 volt control or 4 – 20 & 0 – 20 ma is selected via J7 500Ω and DIP Switch #8. All voltages/currents are with respect to Pin 3 (0V). Unlike other DAT controllers, No pot is present on PCB. If no #6 command is available, switch DIP Switch #1 OFF to obtain 100% output.

7. **Inverter Run Confirmation,** output pulls low via open collector (MMBT4401) when inverter is engaged. Follows Inv_ON LED. 10k Ω pull-up to +5. 100Ω in series with the transistor for current limit. 100ma Max, design with 50ma limit.

8. **Inverter OFF** when pulled low to terminal 9 via momentary or continuous. 10kΩ pull-up to +5v. OFF prevails even if ON is present.

9. **Logic Common** for # 8 and 10. Connected internally to #3 common.

10. **Inverter ON** when pulled low to terminal 9 via momentary or continuous. 10kΩ pull-up to +5v. If pulses in 50-60hz ranges present, PDM will phase lock to this input. ON control still functions.

11. **FAULT OUT** pulls low via open collector (MMBT4401) when inverter faults due to: Operating cell current is above or below customer programmed set point. Over temp cell, over temp electronics, sustained instantaneous over current. 100Ω on board, no pull up present. 100ma Max, design with 50ma limit.

12. System **LOCKED**. Digital Auto-Tune feature has found and confirmed the proper operating point. If pressure changes cause significant re-tuning the LOCKED LED will flash. The locked LED will also flash during the initial tuning acquisition, which lasts for a few seconds. 100Ω in series with the transistor for current limit. 100ma Max, design with 50ma limit.

13. Analog 0 – 5vdc, follows average **DC bus current out**. Direct op amp (MC33272AD) 1kΩ series resistor. Scaled by digital gain select. Lower nibble of memory location m108.

14. Analog 0 – 5vdc, follows **DC bus voltage out**. Direct op amp (MC33272AD). 1kΩ series resistor.

15. **Voltage Adjust** input (optional), use 5kΩ pot or voltage or current source, 0-10vdc or 0–20ma only (10v= 100%), impedance 10k Ω. Insert J8 for 500Ω termination. Use PlasmaVIEW Status Tab to select External rather than default Internal Pot.

16. **Clock Freq** out (1x). Output pulls low via open collector (MMBT4401). 100Ω series protection resistor. 100ma Max, design with 50ma limit.

Output Connections (Con16), Soft Charge and External Fan

1. Outputs +5 to be used by soft charge relay and small under chassis fan. Existing loads require .5a. Max total current is 1a. Best to use Con17 above, term #5 for additional +5v loads.

2. Soft Charge relay coil located on PCM. Pulls to Lcom when active.

3. Signal Common (Lcom), same as Con17 #3.

Input Connections (Con12 & Con26), AC Phase Reference for PDM synchronization with Mains

1. Con12 receives 120vac from 480vac step down transformer mounted on plate assy.

2. Con26 facilitates a 24vac alternative input if needed in the absence of above. #1 above is the default and the 24v should NOT be used when above is present.

Output LOAD Connections (Con1), Transformer / Inductor

1. Connect to #1 & #3. The center #2 terminal is NOT connected to anything… Exists to provide UL/CSA required spacing between 1 &3.

Output 12v FAN Connectors (Con2, 5, 7), Processor managed, Tach lead for speed measurement

1. All three connectors have 3 pins to facilitate fan speed measurement. Con2 functions like all other DAT products in that heatsink and cell temperature modulate speed. Max speed is managed via PlasmaVIEW, found on Numeric Tab. A standard two wire fan can also be used but will require a 3 pin connector or wire splice to a 2 pin. If the tach input is unavailable the processor ignores and functions properly. A 2 pin fan can be connected to: Pin1-RED, Pin2-Black.

2. Connectors 5 and 7 each also have their own output driver transistors and are controlled by the same processor port, which is different than above. The behavior is very different from above in that temperature doesn't affect this connector pair. When a RUN command occurs, the startup of each port is time shifted slightly to minimize high starting current requirements. The ports produce full output as defined by PlasmaVIEW, as above. These ports would typically be used for cooling transformers where a fixed cooling is desired. A combined current load of 1.5adc is acceptable.

DATA Ports (Con15, 11), RS232, RS485

1. RS232 is the standard DAT interface and interfaces with PlasmaVIEW or can be managed by a PLC like other DAT controlers…. Con15.

2. RS485 will be available in the future via Con11.

5.1 16 Pin I/O Connections

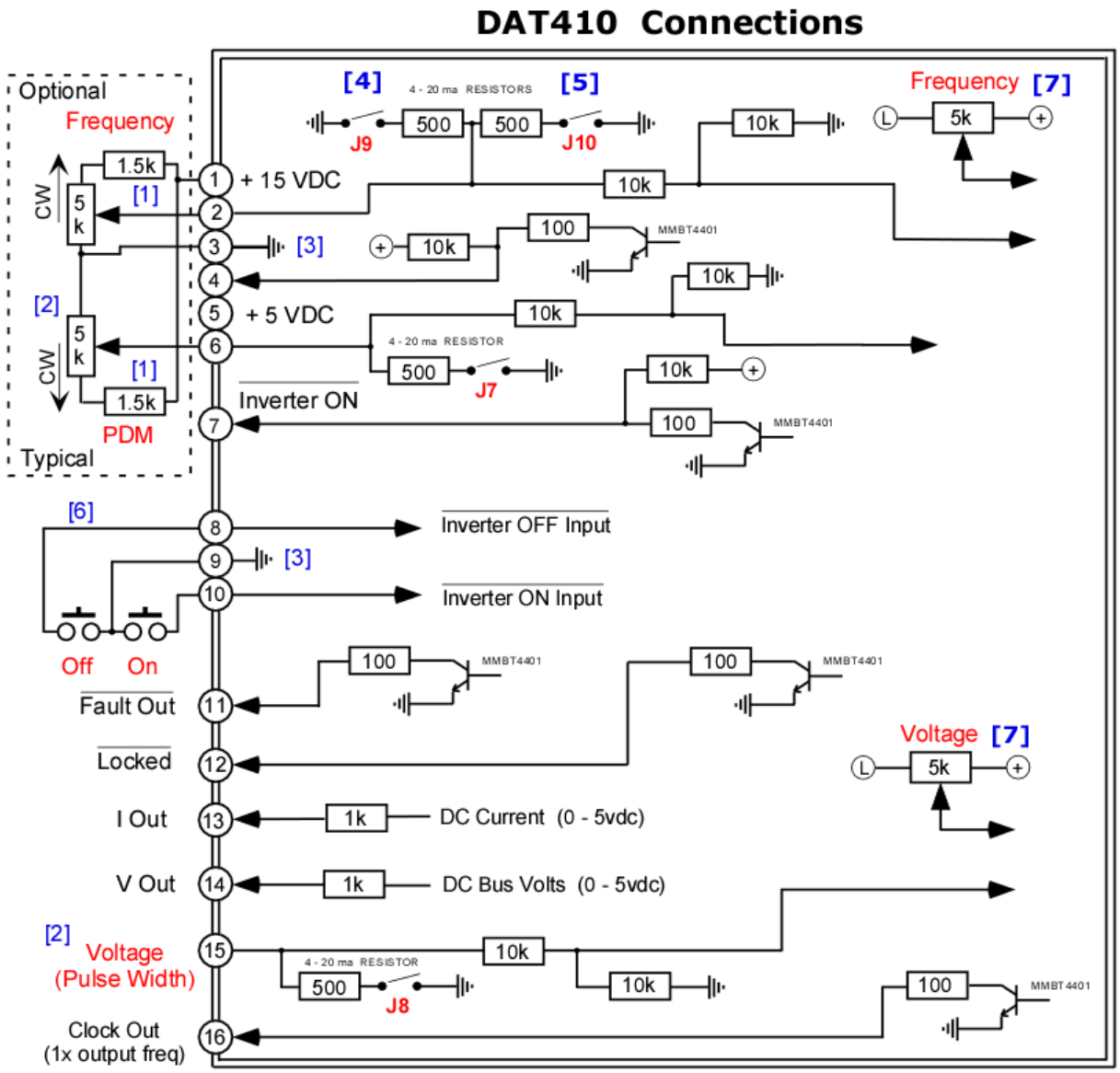

- Grounding either #3 or #9 is not necessary and usually controlled by PLC.
- External pots for frequency and voltage should be multi-turn, cermet substrate types for stability and precision. Rating of 1/4 watt.
- Shielded cable recommended for connection runs of 2' or more.

[1] Optional but recommended (1/4w) to obtain full use of potentiometer range.

[2] External pot 5k, 1500 ohm resistor recommended as per note 1.

[3] Ground symbol represents circuit board floating common, not earth grounded. Best to leave floating or allow PLC to establish the ground relationship.

[4] Insert J9 for 10v @ 20ma (500 ohms).

[5] Insert J9 & J10 for 5v @ 20ma (250 ohms).

[6] Optional SPDT toggle switch or relay.

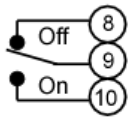

[7] Select on-board or external control for each function via PlasmaVIEW (DEF external).

The most commonly used control wiring for: 0 – 10v, 4-20ma or both mixed.

SINGLE UNIT DUAL CONTROL [LOCAL - REMOTE]

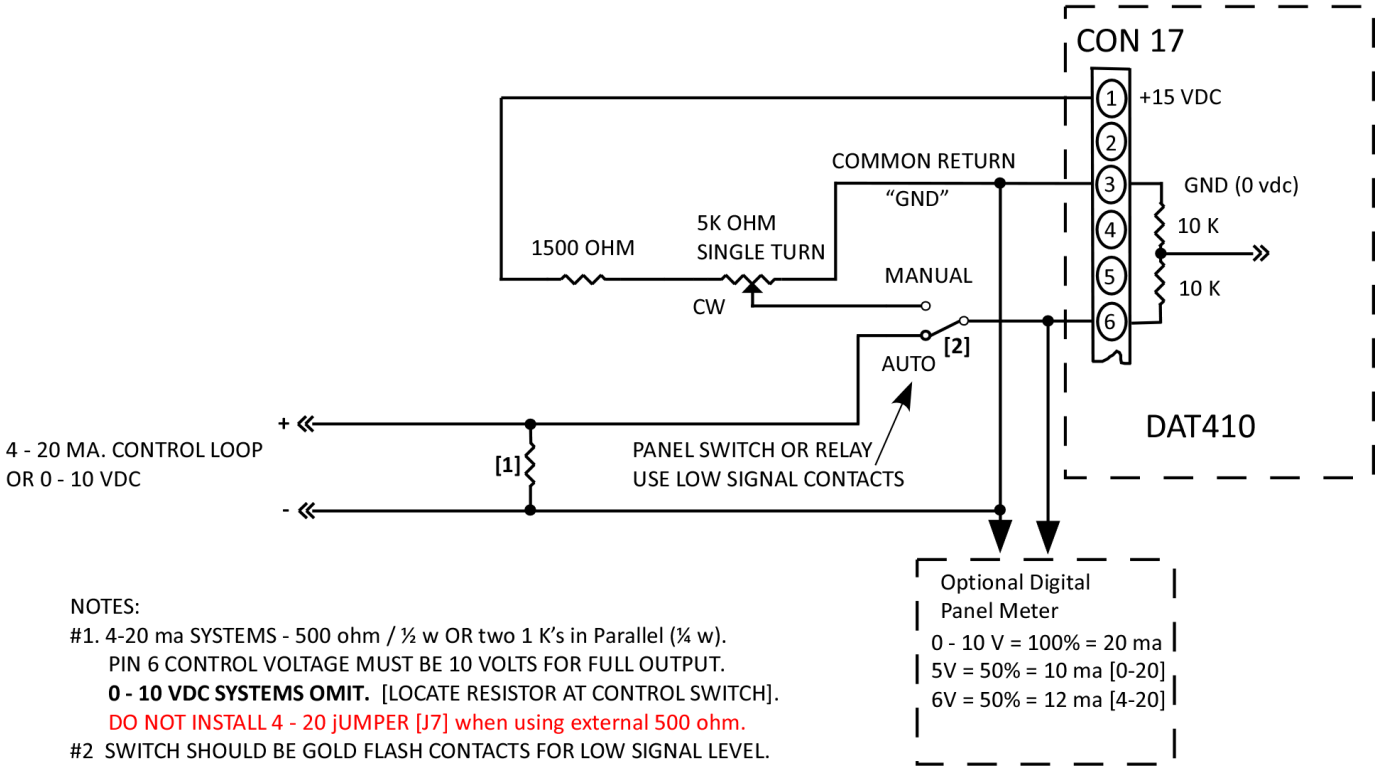

NOTES:

#1. 4-20 ma SYSTEMS - 500 ohm / ½ w OR two 1 K's in Parallel (¼ w).
PIN 6 CONTROL VOLTAGE MUST BE 10 VOLTS FOR FULL OUTPUT.
0 - 10 VDC SYSTEMS OMIT. [LOCATE RESISTOR AT CONTROL SWITCH].
DO NOT INSTALL 4 - 20 jUMPER [J7] when using external 500 ohm.

#2 SWITCH SHOULD BE GOLD FLASH CONTACTS FOR LOW SIGNAL LEVEL.

5.2 Dip Switch & Jumpers

DAT 410 DIP SWITCH CHART

SWITCH SW1	DEFAULT POSITION	NAME	FUNCTION IF INSTALLED
S1	ON	PDM Enable	If PDM is remotely commanded, remove to test 100% output level. This is especially useful if the unit is hard wired to a PLC or ORP controller.
S2	OFF	SSD110 Output Logic	Inverts output status signal Pin# 7 [Inv ON]
S3	OFF	SSD Emulation Mode	Useful when transformer step up ratio greater than necessary. This mode enables PDM turn down linearity when T1 is less than 10%
S4	ON	HIGH/LOW current fault	A window of normal operating current. This will cause a fault if either the LOW or HIGH value is exceeded.
S5	OFF	Soft fault	Produces a wink in fault line #11 if one or more operational windows are exceeded beyond the factory limit. Will not shut down the inverter like a hard fault but attention is needed. The fault is being managed by the inverter processor.
S6	OFF	PDM Ramp	Default – 5 sec. for inverter to ramp from 0 – 100% power. Switch ON is immediate ramp to 100% inverter power. Do **NOT** turn ON for Ozone systems, no startup ramp can easily damage an ozone cell.
S7	ON	Drop Back Mode	Detects load fault in multi-cell units and drops the power back to allow continuous ozone production, unless a fault is detected in two or more cells. If too many cells are faulted then unit will shut off ozone like a normal load fault condition. OFF also detects partial load failure but STOPS inverter.
S8	OFF	4/20 ma.	Configuration for 4 - 20 ma. control 0 - 100% ozone output. At 2 ma the INV_ON LED will flash. At 3 ma. The output is re-enabled. If the jumper is removed, 0 - 10 (0 - 100%) volts controls the ozone output. If the command is for zero ozone, the inverter will be in standby.

DAT 410 JUMPER CHART

JUMPER	DEFAULT	NAME	FUNCTION IF INSTALLED
J1	*Stow	ON with Mains power up if installed	ON-OFF command change. The inverter will turn ON 5 seconds after power is applied and turned OFF when power is removed. This is not recommended because it eliminates Ozone gas purge.
J2	IN	Auto Fan	Fan on when RUN and is speed controlled based on cell and device temp. If OUT, max speed when RUN.
J3	IN	**Full AUTO-TUNE**	Voltage and frequency pots are NOT active. These parameters are controlled automatically. In SEMI-AUTO mode, the voltage pot controls total power but frequency control is automatic.
J4, J6		Factory	Factory selects RS port mode.
J5	Not Present		
J7	*Stow	**IN** = 4/20 ma. Or 0/20 ma. **OUT** = 0 - 10 vdc	Adds 500Ω resistor to **PDM** control input. Usually S8 ON and J7 jumper are used together. If two or more DAT410s are to be controlled via one current loop, wire all Connectors CON17 term #3 together and all term #6 together and install J7 on <u>one</u> DAT410 inverter. For precise control use a resistor > 500 and omit J7.
J8		**IN** = 4/20 ma. Or 0/20 ma. **OUT** = 0 – 10 vdc	Adds 500Ω resistor to optional **Voltage** control input #15, Con17.
J9		**IN** = 4/20 ma. Or 0/20 ma. **OUT** = **0 - 10 vdc**	Adds **500Ω** resistor to optional control input **#2**, Con17. This input can accommodate one of the following: Frequency, Dew Point, ORP.
J10		**IN** = 4/20 ma. Or 0/20 ma. **OUT** = **See Note >>**	Adds a <u>second</u> 500Ω resistor in parallel with J9 to optional control input **#2**, Con17. Results in **250Ω**. Install both J9 & J10 when the current loop source is 5v @ 20ma.

*Jumpers that are available for customer needs, stored on one pin.

Note:

1. There are no jumpers to select Pots vs 16 pin terminal strip external control. Processor monitors both and selection is via PlasmaVIEW.
2. ON/OFF configuration soft jumpers (J1, J2 on DAT410) described in section 5.4 are soft jumpers found in Status Tab of PlasmaVIEW.
3. Pot vs terminal strip control inputs for Voltage and Frequency which are jumpers on other DAT boards are soft jumpers found in Status Tab of PlasmaVIEW.

5.3 Pots & Buttons

Controls and Switches

Control Potentiometers (Pots), No On Board INT/EXT Jumper Selectors

PDM – The DAT410 does NOT have onboard Pulse Density Modulation control pot. Normally terminal #6 input delivers a voltage or current to the unit, which manages a closed loop process ozone level. Power and hence ozone level is easily and instantaneously managed. 10v= 100%, 5v= 50%, and so on. The PDM input is always observed unless SW1 is OFF.

Voltage – Adjusts voltage applied to cell. This control is used to set the maximum power operating point for the unit while in the Semi-Auto mode, but is NOT observed in the Full-Auto mode. Use 5kΩ pot with 1.5k wing resistor or voltage or current source, 0-10vdc or 0–20ma only (10v= 100%), impedance 10k Ω. Insert J8 for 500Ω termination. Use PlasmaVIEW Status Tab to select External rather than default Internal Pot..

Frequency – Adjusts cell frequency. This pot is factory set and not observed unless the unit is in the factory set-up configuration. Frequency is dynamically managed by the processor for both Semi and Full Auto modes. External control is selected by PlasmaVIEW soft jumper found in PlasmaVIEW Status Tab. Use 5k Ω pot, 0-10vdc only (10v= 100%). 10 volts can be derived with a 1.5k resistor in series with the pot to +15.

Buttons

Op_OK – This switch has two uses. Additional information is available in the detailed description.

1. When the inverter is ON and AutoTune J3 is OUT, stores the present running parameters of voltage, frequency range, current tolerance along with other internal configuration information available, as **normal** field operation. This information becomes the re-start information after an OFF - ON power cycle. A soft button also exists in PlasmaVIEW. PTI web site has narrated video in SUPPORT tab.

2. Recalls the factory set-up table to active memory when the inverter is powered up but OFF. The factory table is never overwritten and can be recalled as a last resort if the unit has been improperly adjusted beyond recognition. If the table value operating point isn't acceptable, refer to the detailed description. If this happens, just follow the instructions in the 'Power Adjustment' section.

Start – This switch has two uses to find a new operating point.

1. A **discovery tuning sweep** is conducted if pushed for 2 - 4 seconds AND J3 is uninstalled AND in normal Resonant Mode via PlasmaVIEW. This should eliminate the possibility of tuning aliases and make new system start-ups easier. In other words, it allows the user to force an extended tuning adjustment and witness the results as a troubleshooting tool if needed. This type of operation also occurs automatically, but the user would be unaware of it. If either the power or current is different than the values found in the 'Power Level Table' below, store the new value by removing J3, adjusting the voltage pot (per 'Power Adjustment'), store the corrected running value (per above 'Op_OK'), and re-install J3.
   Once the inverter finds resonance as its operating point, normally it makes only minor adjustments to compensate for minor pressure and flow changes.

The DAT410 and 510 have a new feature to simplify load matching. This feature greatly simplifies the first startup with unknown components. A 1 second button push will automatically determine the proper internal software scalers which allow the inverter to be applied outside of its indicated power levels if necessary and assures optimum gain balances resulting in the best possible load matching. See section 8 for detailed instructions

5.4 Methods of ON – OFF Control

JUMPER numbers refer to **Soft** Jumper #'s in PlasmaVIEW not physical PCB Jumpers

SPDT RELAY OR SWITCH

Loss of power when ON: Must turn OFF for 0.2 seconds, then ON.

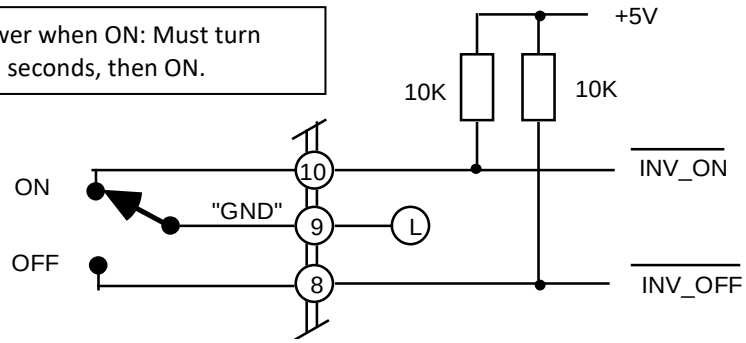

FUNCTION	PWR_UP	J1	J2	J3
To start the inverter the switch must first be in the OFF position, then moved to the ON position for ozone to start.	OMIT	OMIT	X	X
To start the inverter the switch must first be in the ON position, then power is applied to produce ozone. The inverter will start after the "LED banner flash".	IN	OMIT	X	X
X = Don't care condition.				

ON – OFF PUSHBUTTONS

Loss of power when ON: Must turn OFF for 0.2 seconds, then ON.

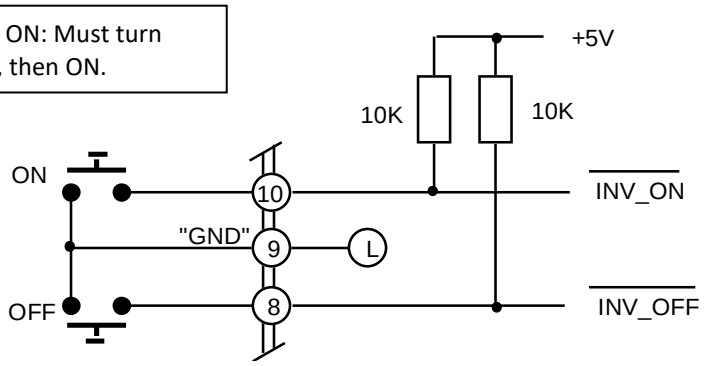

JUMPER CONFIGURATION AND FUNCTION

FUNCTION	PWR_UP	J1	J2	J3
Push ON and push OFF to start ozone production. If both pushbuttons are actuated simultaneously, the inverter will stay OFF.	X	OMIT	X	X
X = Don't care condition.				

SAFETY SWITCH INVERTER CONTROL CIRCUITS

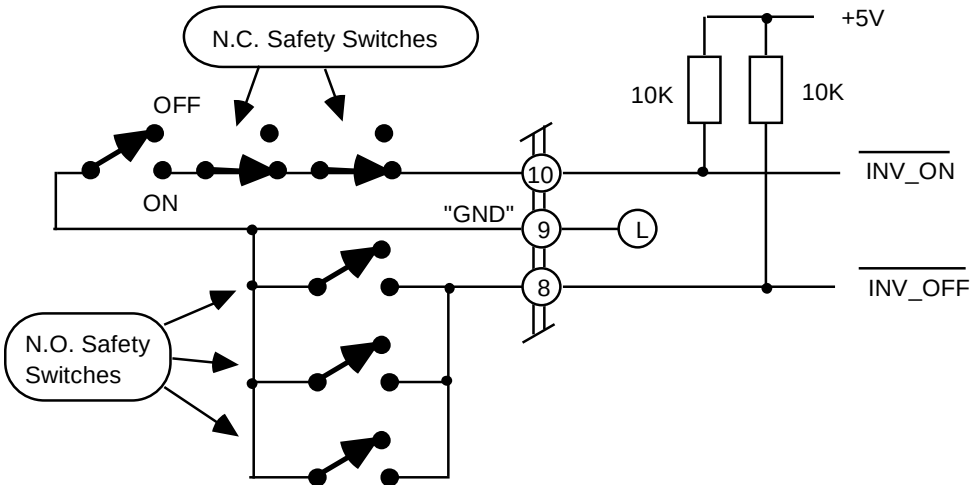

Loss of power when ON: Must turn OFF for 0.2 seconds, then ON.

FUNCTION	PWR_UP	J1	J2	J3
To start the inverter the switch must first be in the OFF position, then moved to the ON position for ozone to start.	OMIT	IN	OMIT	X
To start the inverter the switch must first be in the ON position, then power is applied to produce ozone. The inverter will start after the "LED banner flash".	IN	IN	OMIT	X
X = Don't care condition.				
If any of the normally open (N.O.) safety switches goes closed then ozone production cannot start or will cease if operating.				

PLC POWERED SAFETY SWITCHES WITH STATUS REPORTING

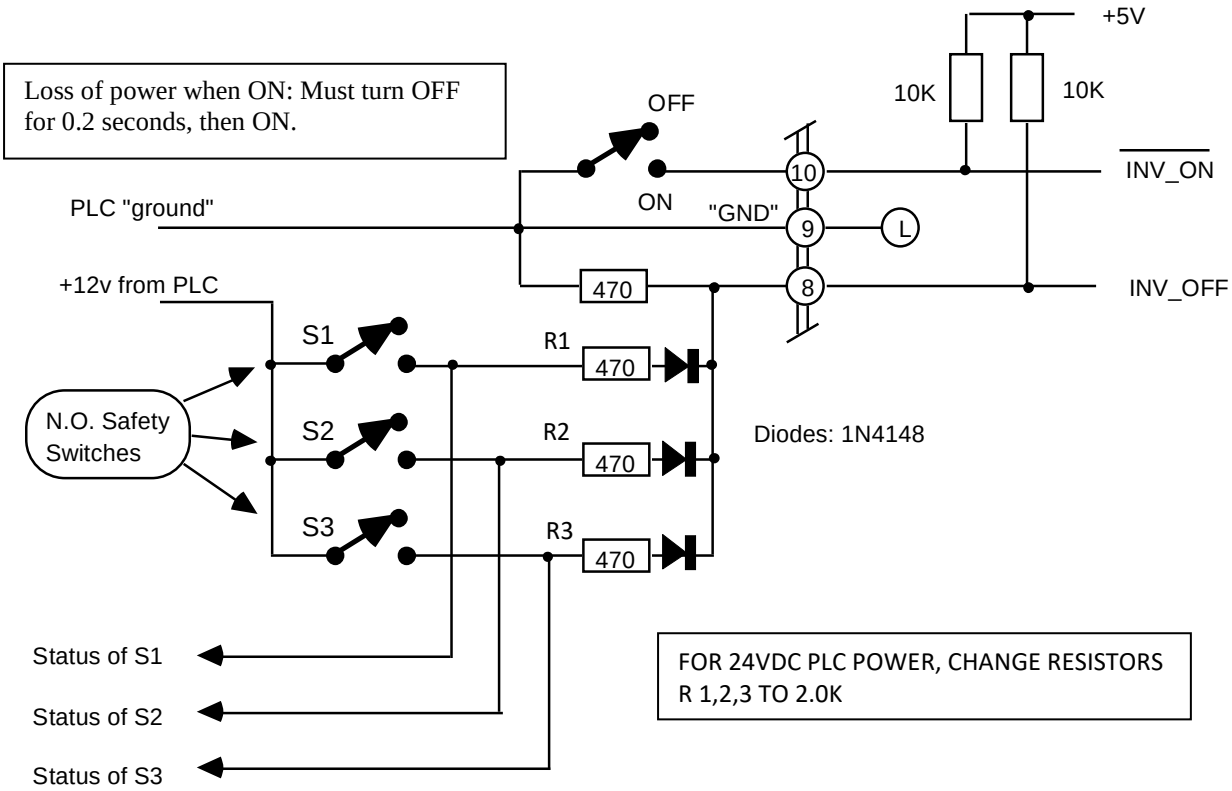

FUNCTION	PWR_UP	J1	J2	J3
To start the inverter the switch must first be in the OFF position, then moved to the ON position for ozone to start.	OMIT	IN	IN	X
To start the inverter the switch must first be in the ON position, then power is applied to produce ozone. The inverter will start after the "LED banner flash".	IN	IN	IN	X
X = Don't care condition.				
If any of the normally open (N.O.) safety switches goes closed then ozone production cannot start or will cease if operating. This circuit allows the PLC to monitor the switch status.				

Note: The processor scans J1, J2, J3 only on power up. Changing the jumpers will not be immediately recognized unless the inverter is shut OFF – then ON.

5.5 Multi-Unit Control

Two user wiring options are shown. If an Auto/Manual front panel switch is desired to control one or two inverters, use the schematic shown. This also allows a single control input to control both inverters with either inverter powered down.

DAT410 PLASMA TECHNICS SUGGESTED OPTIONS

4 -20 MA. AUTO/MANUAL TRANSFER SWITCH CONTROL LOOP FOR TWO INVERTERS

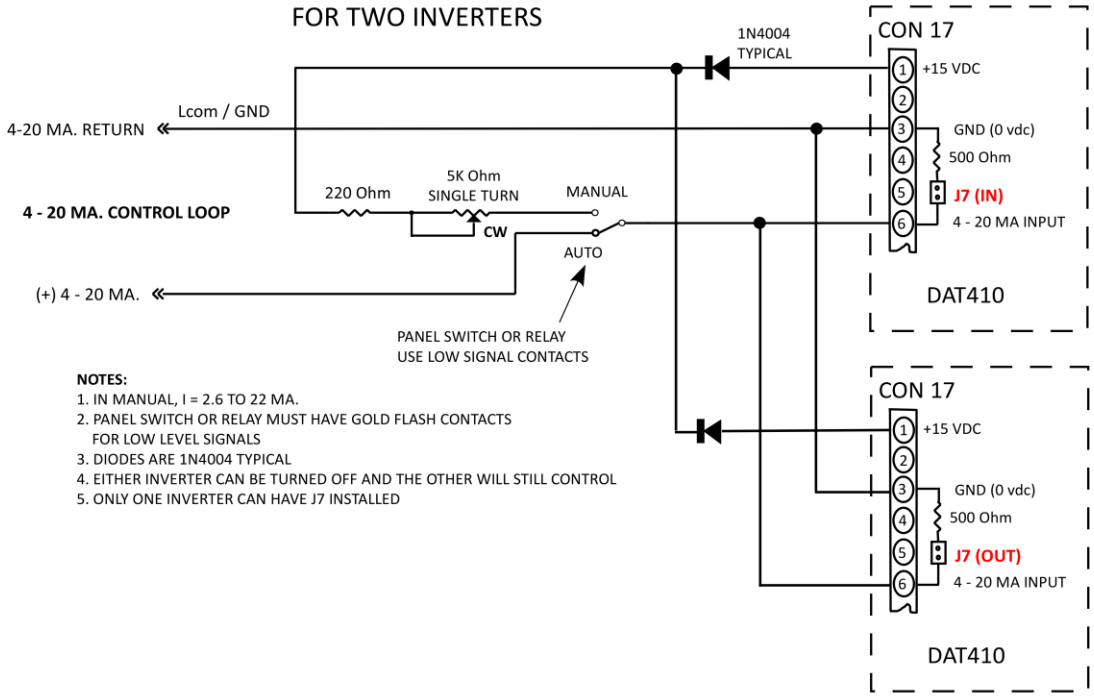

NOTES:
1. IN MANUAL, I = 2.6 TO 22 MA.
2. PANEL SWITCH OR RELAY MUST HAVE GOLD FLASH CONTACTS FOR LOW LEVEL SIGNALS
3. DIODES ARE 1N4004 TYPICAL
4. EITHER INVERTER CAN BE TURNED OFF AND THE OTHER WILL STILL CONTROL
5. ONLY ONE INVERTER CAN HAVE J7 INSTALLED

0 - 10 VDC AUTO/MANUAL TRANSFER SWITCH CONTROL LOOP FOR TWO INVERTERS

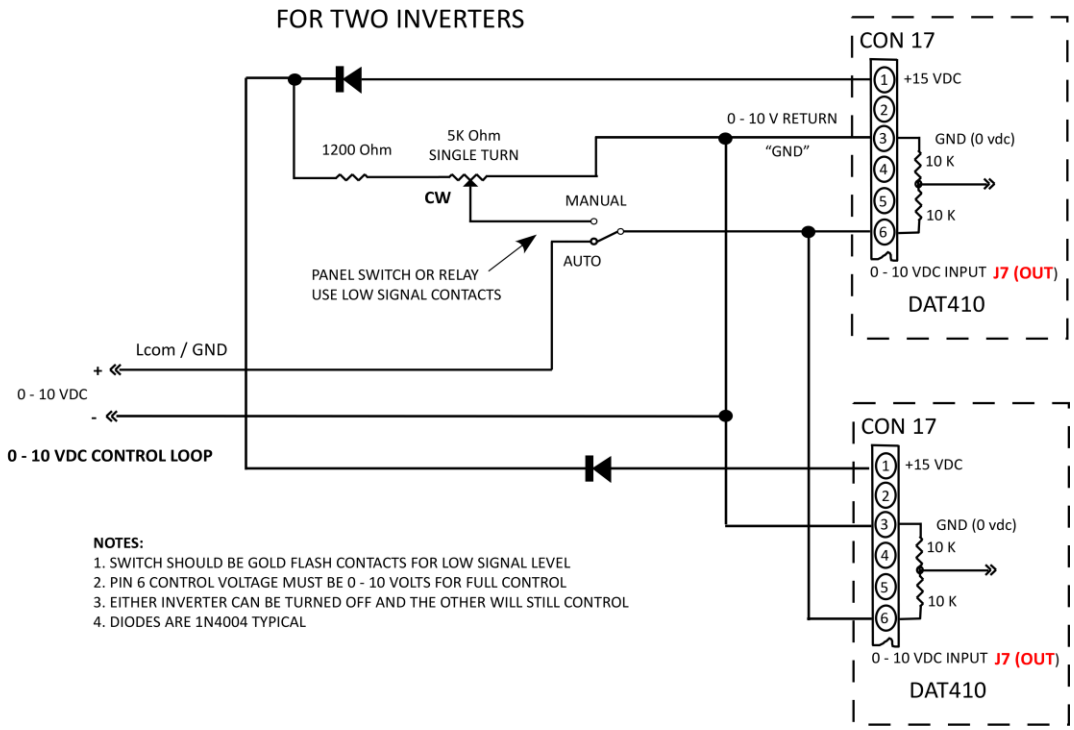

NOTES:
1. SWITCH SHOULD BE GOLD FLASH CONTACTS FOR LOW SIGNAL LEVEL
2. PIN 6 CONTROL VOLTAGE MUST BE 0 - 10 VOLTS FOR FULL CONTROL
3. EITHER INVERTER CAN BE TURNED OFF AND THE OTHER WILL STILL CONTROL
4. DIODES ARE 1N4004 TYPICAL

6 Operating Status LEDs

DAT410 Status LED description

RXD	New	Flashes per data, DAT is receiving data via RS232 interface, 'Good COM'.
Soft CHG	New	Soft Charge process complete, relay engaged, DAT will accept RUN.
+5vdc		Low voltage DC supplies are operational (line voltage applied to unit).
INV ON		**On solid** – Inverter output enabled. Ozone output per PDM command, if enabled. **Flash** - Output enabled via ON command but disabled by PDM < 2ma (4/20). Output is re-enabled if PDM > 3ma, 'INV ON' LED on solid.
LOCKED		**OFF, Winks ON** – Semi-Automatic tuning is enabled when jumper J3 is removed. Frequency tuning occurs during wink interval. Search rate varies automatically. The Voltage pot is active and should be used to set the desired full power operating level. See: 'Start' button adjustment procedure. **ON, Winks OFF** – Occurs only in 'Auto-Tune mode when Jumper J3 is installed and signals that the proper operating point has been established and 'locked'. The indicator is ON mostly continuously, and only winks off momentarily while a new scan of the operating parameters is validated.
LOW POWER		**Flash** – Output current is slightly below the programmed tolerance window. A service request enunciation is placed via the soft fault if switch S5 is ON. No disabling action is taken in this state. If the current continues to drop, the flash will transition to an on steady (solid) mode – see ON solid, below. Note: It is normal for the LOW POWER LED to flash for a few seconds when a large incremental <u>increase</u> in PDM is commanded. This can be helpful in that it will provide a visual indication that the PDM control input is being stimulated. No enunciation action is taken. **ON solid** – Output current to the ozone cell is lower than the allowable programmed window. If sustained, a hard fault will be generated in 32 seconds, which disables ozone production when FAULTED LED is ON solid. This LED will be latched on indefinitely to provide service diagnostics. The latched fault is cleared by either an OFF / ON transition (includes 4/20 off as well) or power cycle.

HIGH POWER

Flash – Output current is slightly above the programmed tolerance window. A service request enunciation is placed via the soft fault if switch S5 is ON. No disabling action is taken in this state. If the current continues to increase, the flash will transition to an on steady (solid) mode – see ON solid, below.

Note: It is normal for the LOW POWER LED to flash for a few seconds when a large incremental decrease in PDM is commanded. This can be helpful in that it will provide a visual indication that the PDM control input is being stimulated. No enunciation action is taken.

ON solid – Output current to the ozone cell is higher than the allowable programmed window. If sustained, a hard fault will be generated in 32 seconds, which disables ozone production when FAULTED LED is ON solid. This LED will be latched on indefinitely to provide service diagnostics. The latched fault is cleared by either an OFF / ON transition (includes 4/20 off as well) or power cycle.

LOAD FAULT

ON solid – Possible flooded cell, shorted cell or open transformer connection.

HOT LOAD

Wink – Cell temperature is slightly above programmed limit. No disabling action is taken in this state. If the temperature continues to increase, the wink will transition to a flash (longer duty cycle than wink) – see below. During this mode the processor is reducing the PDM level automatically in an effort to lower the cell temperature. This of course also reduces ozone output.

Flash – Cell temperature continues to rise. PDM is controlling power to hold cell temperature constant in an effort to produce some ozone and remain online. This elevated temperature will not damage the cell. A service request enunciation is placed via the soft fault if switch S5 is ON. No disabling action is taken in this state. If the temperature continues to rise, the flash will transition to an on steady (solid) mode – see ON solid, below.

ON solid – The ozone cell temperature is higher than the allowable programmed window. If sustained, a hard fault will be generated in 32 seconds, which disables ozone production when FAULTED LED is ON solid. This LED will be latched on indefinitely to provide service diagnostics. The latched fault is cleared by either an OFF / ON transition (includes 4/20 off as well) or a power cycle.

HS TEMP

Wink – Heat sink temperature (electronics) is slightly above programmed limit. No disabling action is taken in this state. If the temperature continues to increase, the wink will transition to a flash (longer duty cycle than wink) – see below. During this mode the processor is reducing the PDM level automatically in an effort to lower the heat sink temperature. This, of course, also reduces ozone output.

Flash – Heat sink temperature continues to rise. PDM is controlling power to hold cell temperature constant in an effort to produce some ozone and remain on line. This elevated temperature will not damage the cell. A service request enunciation is placed via the soft fault if jumper J4 is in place. No disabling action is taken in this state. If the temperature continues to rise, the flash will transition to an on, steady (solid) mode – see ON solid, below.

ON solid – The heat sink temperature is higher than the allowable programmed window. If sustained, a hard fault will be generated in 32 seconds, which disables ozone production when FAULTED LED is ON solid. This LED will be latched on indefinitely to provide service diagnostics. The latched fault is cleared by either an OFF / ON transition (includes 4/20 off as well) or power cycle.

IGBT FAULTED

If a short circuit is present on the inverter output, sophisticated electronic circuits instantly disable the effected power section. If this occurs over too many cycles, the output is disabled and a fault is enunciated.

FAULTED

Rapid Flash – signals a **SOFT FAULT** via open collector to terminal #11. **Switch S5 must be ON for this mode to be active**. A soft fault up to 32 seconds in length can be produced by any one of the following: cell operational current signature, high or low current, high instantaneous current in the output power section, over temp in the electronics or cell. A hard fault will **not** be latched or reported as a hard fault if the fault self-corrects within 32 seconds.

Both cell and electronics over temp conditions invoke an automatic closed loop turndown control of the PDM function that results in a constant, but elevated, cell temp. This condition can be sustained indefinitely. If the system can manage the event, no hard fault is delivered. **This is a summons for service.** Ozone production is reduced, but not disabled.

On solid - signals a **HARD FAULT** via terminal #11 (pulls low). Ozone production is OFF; the nature of the fault is latched and enunciated.

7 Applications

7.1 System Component Wiring

The DAT410 is intended to be used with PTI transformers and inductors to drive the user's ozone cell. PTI ozone cells are well matched to the DAT410's performance but others can be used. Since the user's cells can have widely differing gaps, lengths and materials of construction, the inverter should be put in MANUAL mode to allow the user to find their cell's operating area.

Suggested installation wiring for an ozone application:

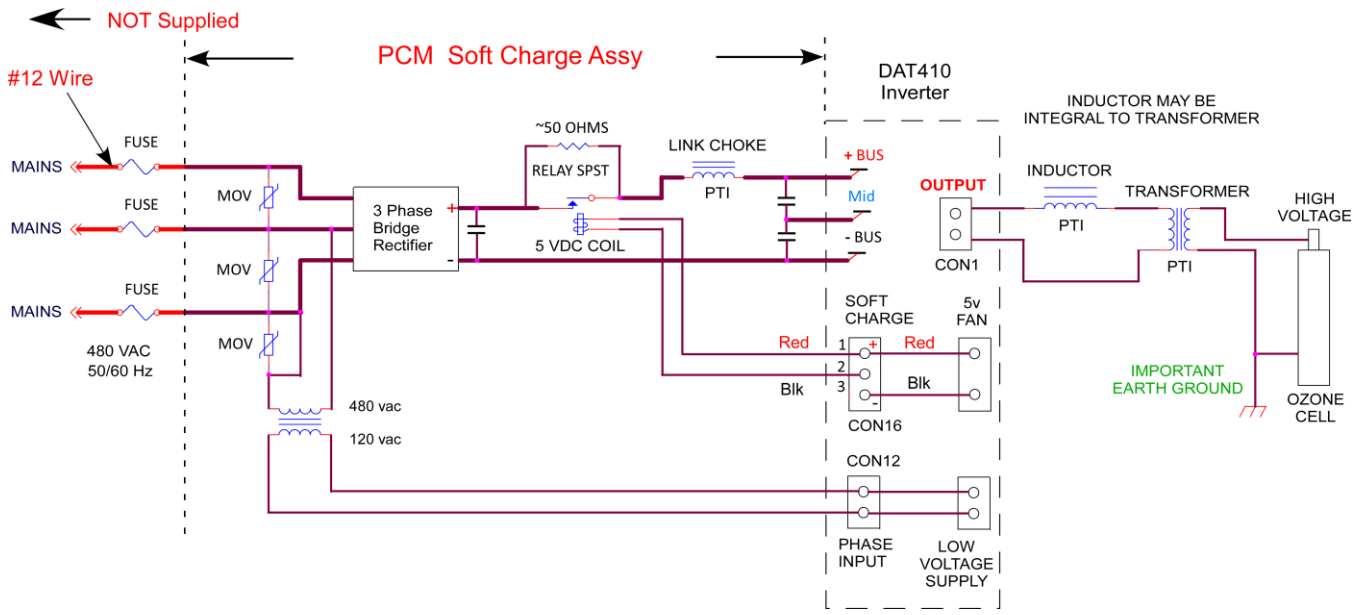

FIG 7.1 System Component Wiring

The Power Conditioning Module (PCM) for the DAT410 (460v) is similar but different than the DAT210 (230v) version.

1. Built for 10kw and as such has up to 4 large electrolytic filter capacitors augmenting the pair on the DAT410. An additional MID point Bus wire is also required.
2. The Soft Charge relay has its own processor based control which allows a whole myriad of complex and conflicting Mains issues to be addressed intelligently.
3. The above wiring diagram is not a complete schematic for the PCM. Included in its capabilities are: Mains MOVs, Mains noise filtering capacitors, DC Bus MOV suppression and filtering, added Bus filtering, Soft Charge resistor and shunt relay, high capacity Link choke.

Also included on the charge plate assembly is a 480v to 120v step down transformer which connects to the DAT410 to provide a phase reference for PDM and a line voltage source for the standard low voltage switching supply used on all DAT boards (±15vdc & +5vdc).

Specify P/N 70328 that includes all components in 7.2 below.

7.2 Plate Assembly Wiring View (figure)

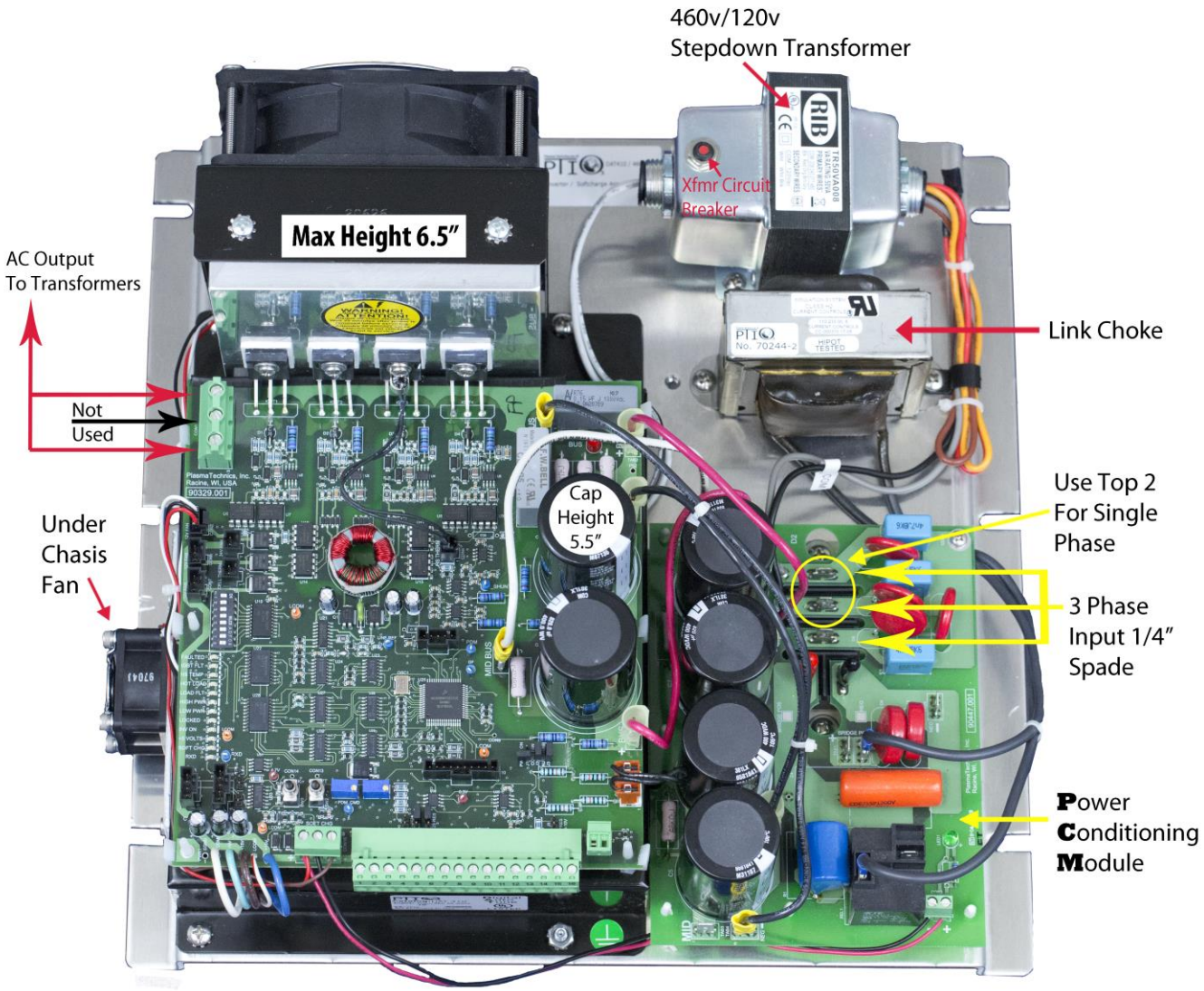

7.3 Retrofit Series transformer types that can be used with the DAT410

The 200-HSHI04803/D230, for example, is rated for 240v or 480v operation, 8KVA at 1.2 KHz. While this transformer can be operated at 600 Hz one must be very careful to reduce the input voltage in half so as to prevent overheating and burn out. This reduction will also reduce the power available for said transformer to 4800 VA. Increasing the frequency above 1.2 KHz is no problem either as long as the case temp limits are observed.

The HSH series transformers will operate from 1 to 10 KHz.. This transformer can easily be driven to power levels beyond its means by the inverter. The HSH series is used with a matching choke to form a tuned circuit, which are intrinsically self-protecting for mis-tuning.
The same general rules also apply to the 100-HLHxx302/D230, which is rated at 3kva at 1.2khz. It has a primary of either 230 or 460v. This transformer is a better match for the capacity of the DAT 210.

PTI has several voltage output levels available in the 3kva Case100 series. If you are uncertain as to the proper high voltage level needed in your application it is recommended that the transformer be strapped for 460 V operation while the inverter has 230 applied. This will reduce the output high voltage by 50%. I.E. A 10kv transformer would produce 5kv and is also de-rated in power from 3 KVA to 1.5 KVA. The need for this test configuration is mandated by the measurement of rated or nearly rated inverter input current while having a relatively low transformer primary voltage measurement, 200-300 V (460 Vac inverter input).

It is recommended to contact PTI before attempting to match a transformer to a load. PTI's experience can solve application problems before the problem becomes more critical.

8 Start - up

8.1 Safety Considerations

DANGEROUS VOLTAGES ARE ON THIS CIRCUIT BOARD

To avoid injury to personnel and/or damage to equipment only qualified personnel should perform the procedures outlined in this chapter. This person must understand both the electrical and mechanical components associated with the application.
Thoroughly read and understand the following procedures before beginning the start-up process.
The following specific safety procedures must be observed when performing any maintenance or adjustments on the amplifier.
Always turn off and lock out AC power at the main machine disconnects switch. Do this before touching any electrical or mechanical components.
High voltage may be present even with all electrical power supplies disconnected.
Use an appropriate meter to verify that all DC bus capacitor banks have been discharged before working on any equipment. Do not rely exclusively on high voltage RED LED indicator for bus voltage, as dangerous voltage levels may remain even when the indicator is off.

Follow industry recognized safety procedures. Use only one hand to hold test equipment probes, wear approved eye protection, etc. Before energizing the inverter, make sure that device(s) connected to the output of the inverter will not result in injury or damage to equipment. Keep unnecessary personnel out of the immediate work area. Never leave an inverter cabinet open and unattended.

8.2 Start-up Checklist

To ensure a complete checkout and test, check off each step as it is completed. If the proper event does not occur while performing this start-up procedure, do not continue. Take the appropriate action to correct the malfunction before proceeding.

- Ensure the main disconnect switch is locked off. High voltage may be present, even with all electrical power supplies are disconnected. Use an appropriate meter to verify that all DC bus capacitor banks have been discharged before working on any equipment. Do not rely exclusively on RED LED indicator of bus voltage, as dangerous voltage levels may remain even when indicator is off.
- Verify that the inverter mounting has been performed in accordance with the guidelines listed in Chapter 2.
- Inspect the inverter to verify that all optional modules have been selected and installed according to the system drawings and documentation.
- Verify that all wiring has been installed according to the wiring plan produced by the design engineer and according to the guidelines listed in Chapter 3 for proper connection, grounding, wire size, labeling, routing and applicable codes. The DAT410 does not have internal fusing. Install input and output (optional) fusing per suggestions Page 23.
- Verify that all electrical terminals, screws, nuts, and bolts are securely fastened.
- Apply high voltage DC or single-phase AC power to the inverter as specified.
- Check to make sure that the RED Bus voltage LED is on, indicating bus voltage.

8.3 Start-Up Procedure Power Adjustment

Reasons for changing the factory setup:

By altering the 'Voltage' setting, you can easily modify the full power operational point if need be. Remember that the purpose of the PDM control is to provide a turndown from the 100% power set-point established by the **VOLTAGE** pot. The goals are 1) Maximum power and 2) Current High/Low limits. Adjustment is very easy.

If it is determined that the PlasmaBlock® has much more ozone output than the application requires. You would know this if, for example, if the closed loop control from an ORP unit always had the PDM adjusted to a very low value of current, like 4-10ma. **(Use Method 1)**
OR
A PlasmaBlock® is going to be applied at pressure and flow range that is different from the factory setup. **(Use Method 1)**

OR

If the inverter was purchased to be used with a PTI resonating inductor and transformer set to drive a new cell or changed cell configuration, the inverter would have to be tuned. **(Use Method 2)**

Method 1 for PTI cells and PlasmaBlocks®

REMOVE POWER FROM THE INVERTER FOR SET UP

1. **Install a true RMS current clamp-on meter** to one of the mains AC power wires, terminals 1 or 2 of Connector 2. A power meter could also be used.
   Note: An inexpensive and surprisingly accurate power meter can be purchased for $25-$35: UPM model EM100 or Kill-A-Watt from P3 International.
2. **PDM should be set at 100%.** Another method of turning the PDM to full ON if it is more convenient is to turn **Switch S1** OFF. This forces the PDM at 100%.
3. **Verify Switch S4 and S5 OFF**: fault enable. This will prevent any faults, current exceeding the High/Low limits for example, from shutting down the unit while it's being adjusted.
   Note: Maximum power safety is now OFF. It is possible to damage the ozone cell.
4. **Pull jumper J3 AUTO**, which will select the **Semi-Auto** mode and allow the **VOLTAGE** pot (potentiometer) to be manual active. The frequency will still be automatically adjusted for resonance.
5. **Turn the VOLTAGE pot counterclockwise (CCW)** until clicking sound indicates minimum.

APPLY POWER TO THE INVERTER – TURN THE INVERTER ON

6. **Adjust the VOLTAGE pot CW** to the desired maximum current (power) level permissible. Ozone levels alone can also be used to establish maximum power if satisfactory at a lower current (power). The processor continues to optimize other aspects of the tuning process as indicated by the occasional 'wink' of the **LOCKED** (resonant frequency found) LED. If the **VOLTAGE** control is increased excessively (pot CW), and a safety limit is reached, the pair of Red LEDs will **flash rapidly** in an alternating manor. This will not damage the ozone cell. Simply **reduce** (CCW) the voltage **control** to an acceptable level of current (power) and the LEDs will extinguish.
7. **Set the High/Low power limits.**
   Push the **OP_OK** push switch once (~1 second). Two Yellow LEDS will come on and blink slowly. This is the +/- 40% power fault tolerance limits.
   Push **OP_OK** once again. The Yellow LEDS will flash faster. This is the +/- 20% limit.
   Push **OP_OK** once again. The Yellow LED will flash even faster. This is the +/- 10% limit.
   Keep pushing **OP_OK** and the cycle repeats.
   The normal factory recommended limit is +/- 20% (40% total). Systems with large fluctuations in gas pressure and/or line voltage should use 40%.
8. Lock in the new operating point by **pushing and HOLD the 'Op_OK' button until the Red LEDs come ON**. Then release it. Then ALL the LEDs will come ON (except FAULT) momentarily to acknowledge your input and the inverter will turn OFF. This action permanently stores the new parameters in the processors memory and causes a reboot of the unit.
9. Set Switches **S1, S4** to ON. Reinstall **J3** (AUTO Tune). Re-enable by cycling the inverter OFF and ON.
10. Now observe the inverter gradually increase power to the new programmed level automatically at 100% PDM. Frequency control is automatic and the **LOCKED** LED will cycle indicating frequency lock. The inverter PDM can now control power from 1% to the 100% new programmed value.

You should now observe that the PDM level (power control) being commanded from the ORP unit is much greater, for example, hence making the control loop more stable.

OR
The inverter is now properly configured for the new ozone cell components.
OR
The inverter is now properly configured for new pressure or flow ranges.

Method 2 for other manufacturer's generator cells or other applications

Make sure the inverter has the correct code for the frequency range of interest. Either the factory has or will set this up before shipment or you will need a PC in terminal mode connected via USB to RS-232 to the inverter board. Call the factory for the correct codes and instructions.

NOTE: 'Writing' a setup file extracted from an identical system via PlasmaVIEW pre-configures not only the operating parameters but also the master template.

Monitor the line current with a true RMS ammeter. The following assumes power factor correcting components are installed.

It will be necessary to configure the inverter for a manual mode of operation.

S1 OFF Forces PDM to 100% maximum for tuning purposes

S4 OFF Disables alarms and power limits. **It is possible to apply too much power.**

Non-Resonant Mode Enables Manual operation of Freq. and Voltage (via PlasmaVIEW Factory1 Tab)

Jumper J3 OUT Disables full Auto-Tune

Turn the FREQUENCY pot full clockwise until clicking sound is heard

Turn the Voltage pot full counterclockwise (minimum) until clicking sound is heard then CW to 10% T1.

NEW >>> Auto-Calibration Feature:

The DAT410 and 510 have a new feature to simplify load matching. This feature will automatically determine the proper internal software scalers which allow the inverter to be applied outside of its indicated power levels. This feature is ONLY active if the AutoTune jumper is OUT and Constant Power NON-Resonant mode is selected via PlasmaVIEW. [If PlasmaVIEW isn't available, the full manual jumper J3 (via PlasmaVIEW) can be installed after which the mains must be cycled OFF and ON. Once the load calibration is complete and the unit 'flashed', the manual jumper can be removed followed by mains cycling to complete the process as above].

1. Use a manual tuning procedure for the first run, which Constant Power Non-Resonant mode essentially is. Set Frequency high, Voltage low and engage (ON). Increase voltage a small amount and adjust frequency down in search of a frequency that yields the highest power. Repeat these steps several times. If the voltage pot stops having an effect, turn counter clock wise until it reduces power.

2. The re-balance of circuits is now required. Push the START button momentarily for .5 to 1 second. The yellow LED's will blink back and forth a few times (~ 5 seconds). Now the tuning

process can resume. When frequency and voltage are adjusted to desired power, proceed to the next step, repeat the START button procedure.

3. You will notice one of the temperature LED's winks every few seconds. This is a reminder to complete the programming process via the normal 'Flash' process using the 'OP OK' button. PDM must be at 100% via input or SW1 off. The Flash procedure is the same as all other DAT products. Press OP OK momentarily for .5 – 1 sec to select fault tolerance percentage (40, 20 10%, 40 or 20 are typical) then press and hold until the first pair of RED LED's turn on steady (about 10 seconds)… then release. An instructional video can be found on PTI's web site in the Support tab.

4. Step 2 can be repeated as often as you like followed by step 3 when satisfied. When satisfied with above, put the system in standby (STOP) and select other modes such as Resonant or Non-Resonant, MixedMode, Etc.. Note: larger systems with relatively static gas pressure will run just fine in NON-Resonant mode which eliminates the frequency shifting heartbeat. Check the 'Status' tab for archive fault and clear. If in N-R mode skip to #6 below.

5. Re-enable and if everything looks fine Flash the processor one last time to capture the latest changes. Install AutoTune jumper and be certain SW1 is back ON if external PDM control is desired.

6. When the AutoCal has been invoked you will notice the Shunt Gain selection options located in the Factory1 Tab have been greyed out. If you wish to restore the normal fixed gains specified *in the Model/Power Rating window, push the Shunt Gain: Auto Detect 'Cancel' button. Be sure* to pull the AutoTune jumper prior to a Run command and do an 'Op OK' when adjusted to full power.

Procedure if still in Non-Resonant Mode:

7. Observe the current or power meter and reduce the frequency by turning the Frequency pot CCW. The power will peak at a lower power because the Voltage pot is turned down. If the frequency is lowered too far (CCW) the power will reduce. You want the peak.

8. Increase the voltage at the current (power) peak until ½ of the maximum desired current per leg (power) is reached. Readjust the frequency slightly to find the current peak.

9. Increase the voltage until the current reaches 90% of the expected maximum power.

10. Verify the frequency is still at peak with the frequency pot.

11. Increase the voltage pot CW to reach 100% expected power.

12. Set the High/Low power limits with the START button as before.

a) Push the OP_OK push switch once (1 to 5 seconds). Two Yellow LEDS will come on and blink slowly. This is the +/- 40% power fault tolerance limits.

b) Push OP_OK once again. The Yellow LEDS will flash faster. This is the +/- 20% limit.

c) Push OP_OK once again. The Yellow LED will flash even faster. This is the +/- 10% limit.

d) Keep pushing OP_OK and the cycle repeats.

e) The normal factory recommended limit is +/- 20% (40% total).

13. Lock in the new operating point by pushing and hold the 'Op_OK' button until the Red LEDs come ON, then release it. Then ALL the LEDs will come ON (except FAULT) momentarily to acknowledge your input and the inverter will turn OFF. This action permanently stores the new parameters in the processors memory and causes a reboot of the unit.

14. Set Switches S1, S4 and S5 to ON. Reinstall J3 (AutoTune). Re-enable by cycling the inverter OFF and ON.

15. Now observe the inverter gradually increase power to the new programmed level automatically at 100% PDM. Frequency control is automatic and the LOCKED LED will cycle indicating frequency lock. The inverter PDM can now control power from 1% to the 100% new programmed value.

16. If during the manual portion of the tuning effort it is not possible to reach the current peak, call the factory to help diagnose the reason. It may be that the load is very insensitive to the frequency and that Auto-Tune is not feasible. In that case, expect the inverter to be left in the manual mode.

8.4 NEW PDM Mixed Mode (M-M)

Mixed Mode combines two control mechanisms into the normal PDM #6 input, which functions best in Non-Resonant mode. For example; if you've selected a 60% breakpoint… The turn down from 100% to 60% will be accomplished using T1 and 60% to 1% using the reduced T1 plus the normal chopping method. As you probably know, reducing the ozone generator power by reduces voltage (T1) normally would be non-linear but the DAT410 with the AutoTune jumper installed is a constant power device. This approach is ascetically pleasing for two reasons: no chopping occurs for the first 40% of turn down and chopping from 60% to 1% is at a reduced power and hence reduced noise. The processor maintains seamless linearity. Large commercial systems usually have stable gas pressures and flows and therefore are fine in Non-Resonant mode.

1. Located in Numeric1 Tab. Default is off which is displayed as a Break Point of 100%. If the AutoTune jumper is out, M-M is forced off and the standard PDM turn down chopping mode is used.

2. Select a value between 50 and 60% in the 'enter value' window and 'Submit'. This value will now appear in the upper window. Values less than 50% can cause the system power to hunt because the cell high voltage is below ionization potential.

3. If no other adjustments are anticipated, 'Save Flash' when finished.

8.5 NEW Inductor Side

Specifies on which side of the high voltage transformer the resonating inductor is located; Primary or Secondary. Secondary side systems must be treated very gently. Large municipal system are frequently secondary side systems..

1. Located in Numeric1 Tab. Default is **Primary** (Green). Pressing the button will toggle to '**Secondary**' and turn the button yellow.

2. If no other adjustments are anticipated, 'Save Flash' when finished.

8.6 NEW PWM Cycle Mode

Specifies how the output waveform will be constructed. This not only applies to Run/Stop but the start and finish of each PDM chopping burst (30/Sec). Default is **4** which is suitable for Primary side inductor systems. In this case, no T1 PDM ramp occurs or is needed because the inductor nicely handles the integration. The sharper switching improved turn down linearity when PMD is low… say below 20%. This is standard, and unchangeable in all DAT210/310 products. Secondary side systems should be between 0 and 2, which provides multiple T1 steps and dwell thereby reducing transformer heating. 2 is generally fine but large systems above 20kw should be 1 or 0.

1. Located in Numeric1 Tab. Default is **4**. Select a value from the pull down located below meter display, which will update a couple of seconds. This can be done while the load is being driven.

2. If no other adjustments are anticipated, 'Save Flash' when finished.

8.7 NEW Frequency Tune Offset

Specifies a frequency offset (increase) after touch up tune, blink of the Locked LED. Determining a value requires a well instrumented test including oscilloscope and is generally a factory adjustment.

1. Located in Numeric1 Tab. Default is **0**. Insert a value in the lower window. This can be done while the load is being driven.

2. If no other adjustments are anticipated, 'Save Flash' when finished.

8.8 NEW PDM Integration Time

Controls the startup PDM ramp time, which is based on cell temperature, so as to minimize ozone cell thermal shock. This is usually is about 10-15 seconds but can be a minute if the cell is cold… say 50-55f. Default is '**Auto**' (Green). If the cell thermistor isn't connected the processor it will use a ramp in

the 5-10sec range which is indicative of a warm and operational system at say 85f. Cells are often located far enough from the inverter that cell temperature measurement isn't available which would result in potentially dangerously short ramp time. This button can select a fixed ramp time of **30sec**, with or without temperature input.

1. Located in Factory1 Tab. Default is **Auto** (Green). Pressing the button will toggle ramp time to a fixed **30sec** and display as yellow.

2. If no other adjustments are anticipated, 'Save Flash' when finished.

8.9 NEW Multi-Unit Master / Slave Wiring and programming

GENERAL: All DAT products observe and lock onto the power line frequency for the purpose on providing a constant PDM phase reference. When multiply DAT inverters are connect to the same power feed (Mains) abusive power pulsations can occur if the units are allowed to free run. For example, PDM (Pulse Density Modulation) is the turn down method developed by PTI to linearly reduce the power delivered to a load. If 50% were selected and outputs observed, one would see the load is driven at full power for ½ the period and off the other half. The period for the bursts is ½ of line frequency… normal 60hz mains would produces a 30hz PDM rate. If multiple units are utilized this would result in 100% power and 0% power bursts, which will hammer the mains. The DAT product family has the ability to be interconnected in a multi-unit situation so as to spread out or time shift the PDM bursts resulting in a more uniform power demand as the system in turned down.
This feature has been present on the DAT210 series for all time. The newer DAT410 (480v) firmware v1.9 and up also includes this function. Wiring and programming is the same as the DAT210, in fact the two product families can be co-mingled if necessary. Best to use a current PlasmaVIEW version for programming.

A few wiring suggestion schematics follow the operational description.

Unrelated: The DAT410 includes a new LED at the bottom of the stack labeled **RXD** which blinks when the RS232 interface is transferring data.

Master Unit

1. The master unit provides a phase lock pulse at ½ the line frequency on **pin #4**. This is normally the 'Load Fault' enunciation output which can no longer be used for that purpose once it has been selected as a Master. Remove a Load Fault wire if present. However, the Load Fault LED retains the normal Load Fault enunciation.
2. Be certain a common connection exists between the **#3 terminals** of all units.
3. Connect a control wire of light gauge 22-24 is fine **from #4 Master to #10 of each Slave**.
4. When a Run (ON) command is provided, #4 will pulse low and also provide a Run to all Slave units, which can be inhibited by local Stop commands.
5. The Master Run/Stop (8/9/10) can be SPDT or momentary as desired.

6. With the unit powered up and in a standby mode, connect interface adapter and start PlasmaVIEW. In PV, press the **Connect** button and when data connection is verified start the **DAQ**. Select **Limits** tab.
7. In the left **Limits** stack the default **Unit Number is 0**, if not, change it to 0 (**MUST be 0**).
8. Click the grayed out football button labeled '**Slave/Standalone'** – turns Yellow and displays 'Master'.
9. Click **Set New** button, flashes yellow and askes for Level 1 password which is '**plasma**'.
10. A comm error box may appear, just OK and **restart DAQ**.
11. Notice the Unit Number (0) window in the topper display turns YELLOW. Phase locked Sync pulses are now present on #4 output (needs to connected to Slave to observe).
12. Click **Save Flash** button which programs the unit per above. You'll notice a DAT reboot.

Slave Unit/s

1. Pin #10 should have a signal wire attached, per item 3 above.
2. The Slave STOP control can be momentary or more conveniently the normally closed contact from a SPDT relay, which is most common with singe standalone units. IMPORTANT – the normally open contact(Run) can NOT be connected to #10 as a continuous Run, or it defeats the phase lock signal. A STOP command always prevails over RUN**. Example**: if the Master has been given a Run but the Slave unit/s have a Stop present (pin #8 – low), the Slave is Stopped but when the Stop is released, the Slave unit will immediately Run. If the Master is Stopped, a Slave can be made to Run if a momentary Run is provided to the Slave/s. In the absence of a Master sync signal, Slave unit/s will phase lock to their own internal AC reference.
3. If momentary Stop is used, remember to validate Stop after mains power is applied. **The control logic won't permit a Run to be executed if it doesn't know if the Stop works.**
4. The same 'Limits' tab in PlasmaVIEW is used to program the Slave unit/s.
5. In the left **Limits** stack the default **Total Units is 8**, which can be changed to match the total number of units.
6. If a system consists of 1 Master and 1 Slave, then the Slave would be Unit 1, Total Units 2. In actuality a solution that produces better midpoint precision would label the Slave as Unit 4, Total of 8… even better would be Unit 8, Total 16. All the above produce the same basic result but the midpoint sync pulse is noticeably more accurately placed.
7. **DO NOT** click the grayed out football button labeled '**Slave/Standalone'**
8. To complete the programming, click **Set New** button, flashes yellow and askes for Level 1 password which is '**plasma**'if not already satisfied.
9. A comm error box may appear, just OK and **restart DAQ**.
10. Notice the Total Units window in the topper display is updated. Note: The pane labeled 'Limits – Operational' is only updated when the PlasmaVIEW program is run.
11. Click **Save Flash** button which programs the unit per above. You'll notice a DAT reboot.

Master / Slave Schematics

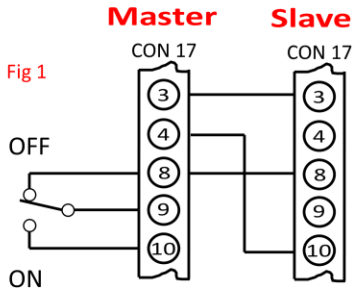

Simplest tandum interface but requires Master being powered and funtional. If Master is not powered, slave could be started if Master switch is On & a momentary connection is made between 9 & 10 of Slave connector, as per Fig 2.

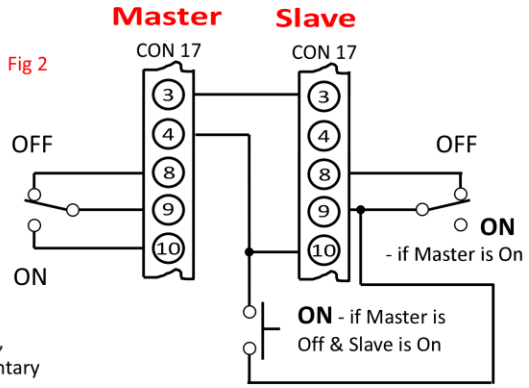

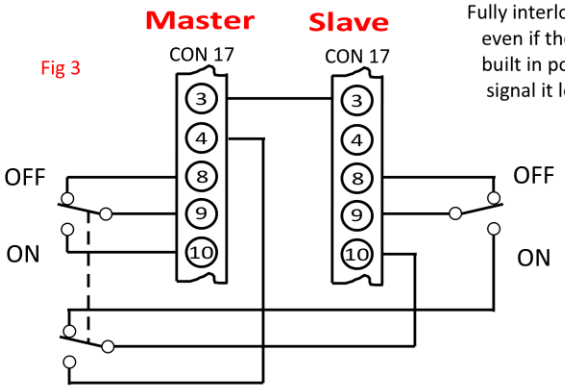

Fully interlocked but totaly seperate. Each can be operated even if the power is off for the other. Each DAT has it's own built in power line phase lock but if Slave #10 detects a phase signal it locks onto it and ignors its own.

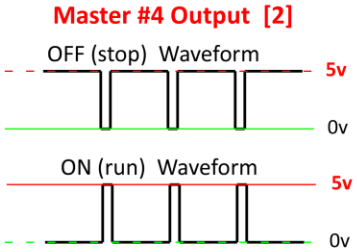

Notes:

1. Switch and button contacts must be low current signaling rating.
2. The pulses presented in Stop waveform won't cause the Slave unit to Run.
3. If the Master mains are off, #4 will drop from 5v to ~ 2.7v but typically won't enable Slave... best to interrupt as shown in Fig 3.

9 Troubleshooting

PROBLEM	STEP	VERIFY	NEXT STEP
ON - OFF switch/PLC control - nothing happens	1	Is there power to the inverter?	No - troubleshoot elsewhere. Yes - Get a voltmeter and do Step 2
	2	Was there 5 seconds between applying power and the ON command?	No - increase the timing between application of power and the ON command. See Section 6 p.18 & 19. Yes - Step 3
	3	+5 VDC between Terminals 5(+) and 3 on CON17 and +5 green LED ON?	No - Check connector seating, broken wires to the small power supply inside the generator toward the rear. Replace supply if necessary. Yes - There is power to the inverter. Step 4.
	4	Is the "INV ON" light on? Measure voltage terminals 3 & 5 Connector 12. Verify if the external command output power setting is at zero? Verify 4/20 or 0 - 10 VDC control as set by Switch 8 on the inverter board.	No - Step 5 Yes - Increase the ozone output control voltage/current.
	5	If you have gone through steps 1 - 4 without results, it is possible that the inverter board has failed.	Replace the inverter circuit board. Refer to the instruction sent with the replacement to ensure reliable operation.

FAULT indicators on the circuit board are illuminated.

ALL LEDS flashing	1	Low voltage power supply cycling on and off	Problem with a broken wire, mis-wiring or shorted circuits in the inverter electronics. Look for metal drilling chips caused by contractor drilling. If there, vacuum the electronics thoroughly and retry. If this is not the problem, go to 2.
	2	If there are no other shorts in the system or the system is mis-wired, the low voltage power supply may be defective.	Replace the low voltage power supply.
FAULTED light - Flashing = soft fault temporary condition	1	Caused by: High or Low cell current, high instantaneous current in power section, over temperature in the electronics or cell.	Usually this fault is a result of improper tuning of the inverter beyond factory limits. Go to Step 2
	2	Is the ambient temperature greater than 40 C (104 F)?	Yes - Improve ambient air flow. Inverter will eventually compensate by running at reduced power. No - Go to Step 3
	3	Retune the inverter using the procedure in Section 7. Review Section 4.	This should solve the problem if flashing. Flashing is a "call for service" with reduced ozone output.

FAULTED light - On solid = Hard fault condition and the inverter is locked OFF	1	Look at other fault lights to diagnose the problem. Ozone production is turned OFF.	Go to step 2.
IGBT FAULTED	2	Is IGBT faulted light ON?	Yes - There is a short in the inverter output section that has exceeded the allowable event limit. Look for damaged or loose wires, metal chips, water corrosion or anything that could cause a short. Using PlasmaVIEW, Factory1 Tab, Push button labeled 'Toggle OVC Protection' so as to turn RED and RUN again. No - Go to step 3
HS TEMP	3	Is HS TEMP faulted light ON?	Yes - Review Status LED description for detail No - Go to Step 4
HOT LOAD	4	Is HOT LOAD faulted light ON	Yes - Review Status LED description Section 6 for detail. No - Go to Step 5
LOAD FAULT	5	Is LOAD FAULT light ON?	Yes - Possible water flooded cell due to the process entering the cell. If the process water is clean, empty the water out of the cell and flush with DI water or 91% alcohol. EMPTY FLUSH WATER FROM CELL! Then dry with very dry oil free air or oxygen for several minutes. Try to operate again. Do not disassemble the cell. Call the factory. No - Go to Step 6.
HIGH POWER	6	Is HIGH POWER light ON?	Yes - Review Status LED description Section 6 for detail.
LOW POWER	1	Is LOW POWER flashing?	Yes - This is non-critical indication that the power is less than the programmed window. No - Go to Step 2
	2	Is LOW POWER ON steady?	Yes - Output current is too low than the programmed window. If this condition remains for more than 32 seconds, a hard fault will shut off ozone and turn on the fault LEDs for diagnostics. Review Status LED description in Section 7 for more detail.

10 NOTES & GENERAL INFORMATION

Enhanced product features include

1. **Soft** and **Hard fault reporting**. **Soft fault** will signal that attention is required. The system is still functional; perhaps at a reduced ozone output level. A **Hard Fault** is signaled when the Plasma Block® has disabled itself. In both cases fault LED's will continue to display the problem until serviced. Reset is accomplished simply by an OFF followed by an ON command.

2. **Constant temperature mode**. If for some reason the cell or electronics cooling is compromised, the processor will reduce PDM automatically to maintain a functionally high cell temperature, all the while generating a Soft Fault. This limp along mode will be at reduced ozone levels.

3. Optionally selectable **High / Low current** fault reporting. This enables a latched fault if the cell current excursion is beyond a normal operational window. PDM level has no effect on enunciation. The tolerance window is easily field set to one of three levels.

4. **Easy troubleshooting**. Extensive fault reporting and fault latching, even if the output is stopped by the user or internal stop, preserves the fault condition indefinitely as long as AC power is applied.

5. **Longer fan life**. Fan speed unaffected by line voltage changes, and is temperature and time controlled. When ozone is commanded off the fan cools down the cell and turns off automatically, thereby **saving energy and extending fan life.**

6. PDM start up ramp rate is automatically controlled by cell temperature to reduce the chance of inadvertent thermal shock under extreme cold temperature conditions.

7. Extended PDM control methods include: 0 – 10vdc via Pot or PLC, 0 / 20ma, 4 / 20ma (with OFF below 2ma). All PDM modes utilize dynamic slew rate limiting for smooth and stable control.

8. 0 – 5vdc analog output for **bus current** and **bus voltage** enables simple PLC monitoring of real power without expensive CT's and complex interfaces.

9. Plasma Block® will **engage when AC power is applied** if continuous ON command is present one of the options described in Section 5.4 (Page 16), thereby simplifying restart in simple, controlled environments.

10. All established operational parameters are **permanently saved in memory** even if power is removed. **No backup power or batteries** are used. Future firmware will likely include histograms of important performance data. On board RS232 interface, for future direct computer data interface.

11. Power on LED marquee verifies LED operation and displays **firmware revision level**.

12. Operating firmware is fully **encrypted** and field **upgradable**.

11 Warranty

PTI Electronic Transformer / Inverter
Limited Warranty

The PTI Electronic Transformer / Inverter is warranted by Plasma Technics, Inc®., to the original purchaser to be free from defects in material and workmanship under normal use and service for a period of **ONE (1) year** from the date of purchase under the following terms and conditions:

The obligation of Plasma Technics, Inc®. is expressly limited to repairing or replacing, at the option of Plasma Technics, Inc.®, any PTI Electronic Transformer / Inverter returned to it during the warranty period, which is determined by PTI to be defective in material or workmanship.

Any improper use /operation or installation other than in accordance with the published application materials, instructions and specifications established by Plasma Technics, Inc.® shall void this warranty.

The obligation of Plasma Technics, Inc.® Shall not include any transportation charges, costs of removal or installation, labor charges or any direct, indirect, consequential or delay damages.

Attachment or use of components or accessories not compatible with the PTI Electronic Transformer / Inverter shall void this warranty.

Any alteration not authorized by Plasma Technics, Inc.® in writing, accident, misuse, abuse or damage to the PTI Electronic Transformer / Inverter shall void this warranty.

The electronic transformer / inverter subject to this warranty is not warranted as suitable for any particular purpose or use of the purchaser. The suitability of any PTI Electronic Transformer / Inverter for any purpose particular to the purchaser is for the purchaser in the purchaser's sole judgment, to determine. Plasma Technics, Inc.® assumes no responsibility for the selection or furnishing of a transformer suitable to the purchaser's needs or the purposes of any particular purchaser.

This warranty is in lieu of any other warranty express or implied, including specifically but without limitation warranties of merchantability or efficacy and of all other obligations or liabilities in connection with the sale or use of the PTI Electronic Transformer / Inverter.